Stepper Motors:

* Ignore image, all connectors: MALE

Plugs into PCB

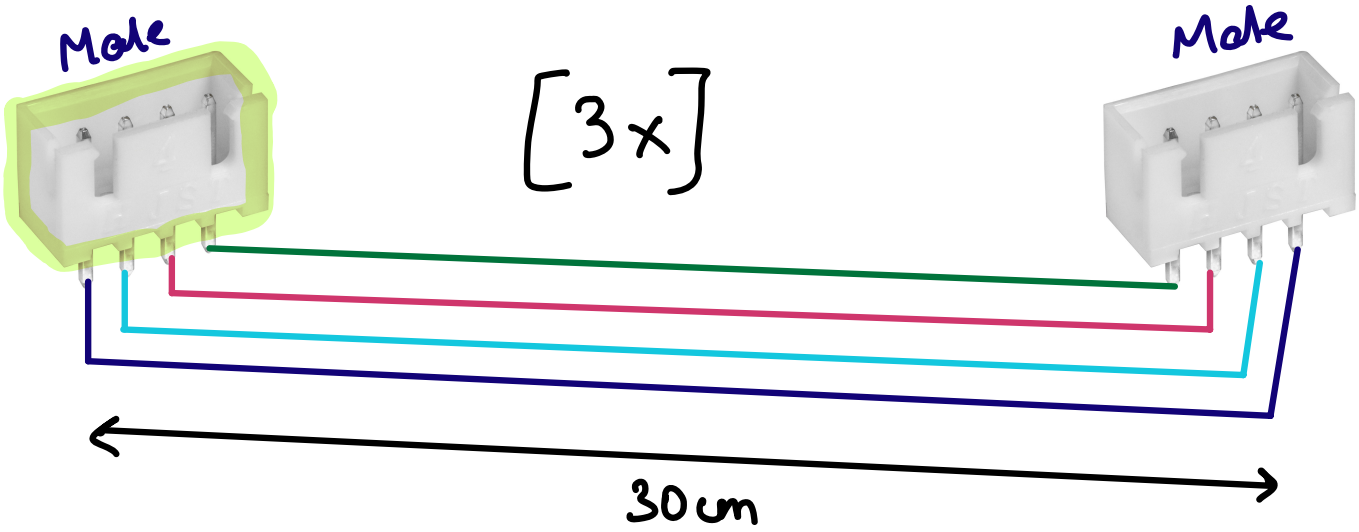

Limit Switches:

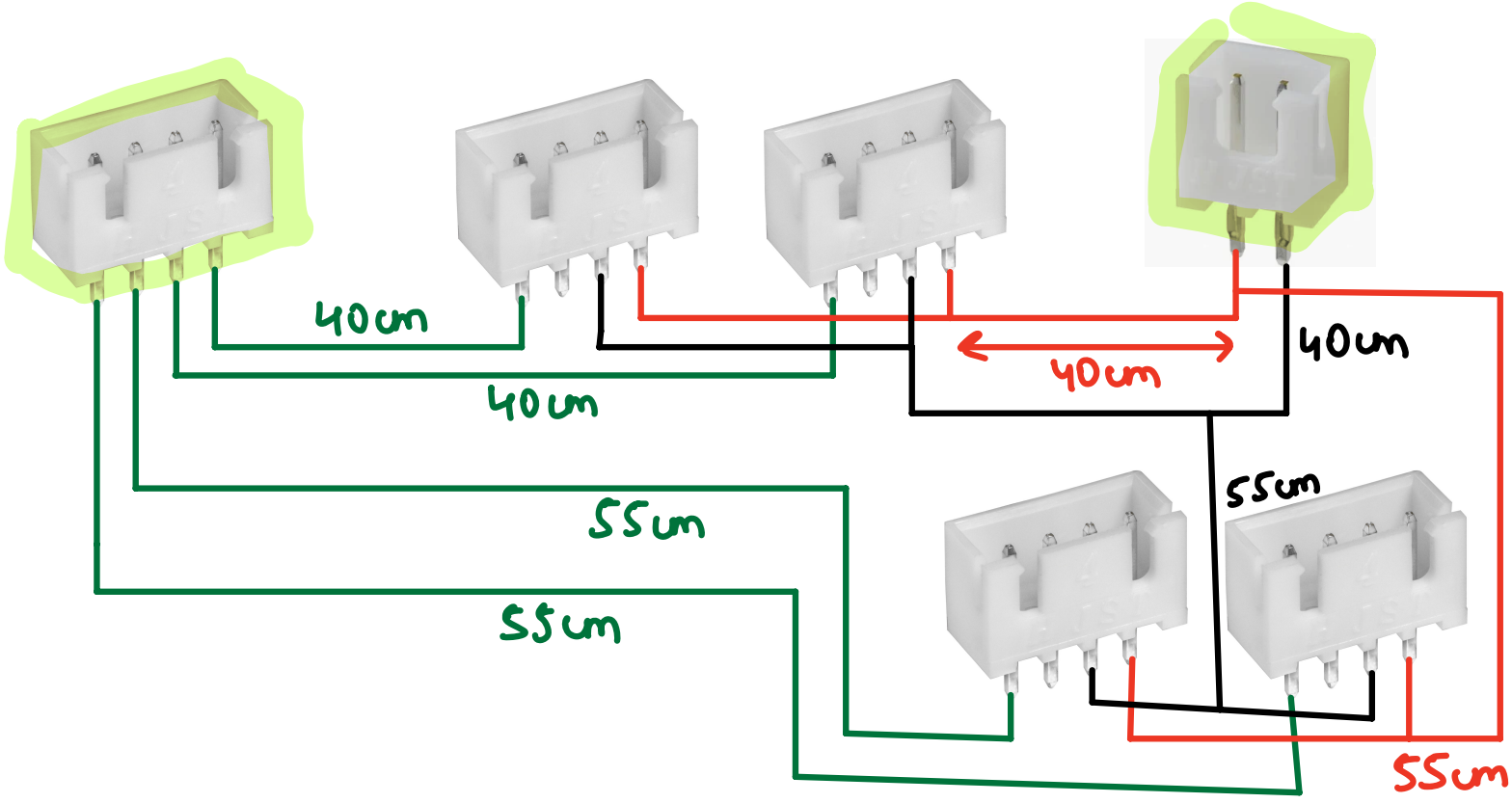
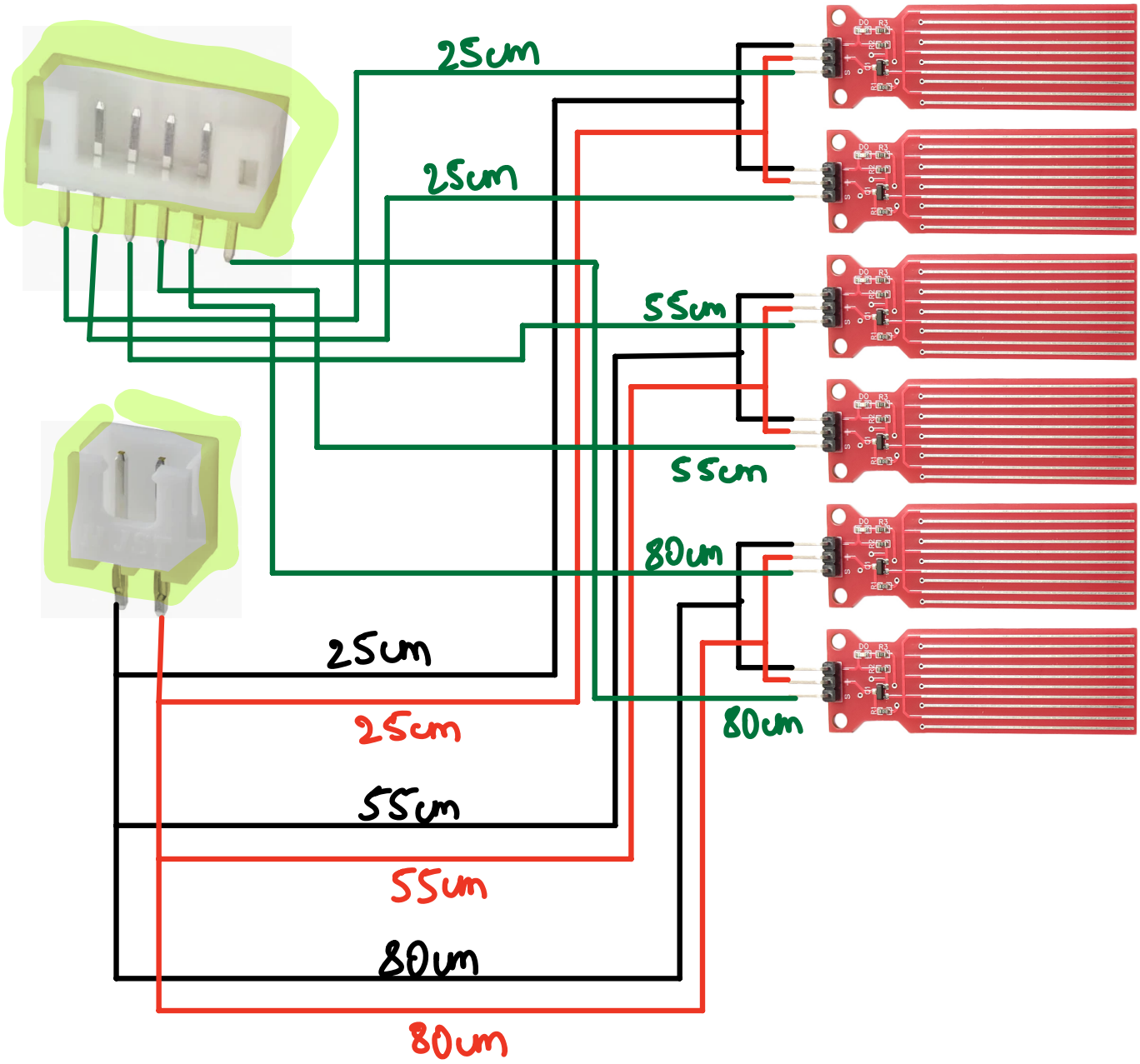
Water level Sensors: